Notes to the Reader

In this section I have collected helpful remarks on the various practical solutions I have chosen for presenting diagrams, concepts, mathematical arguments, references, and protagonists.

Drawings and Notation

To facilitate the reading of the geometrical figures illustrating perspective projections, I have introduced a practice that applies to all the diagrams I have created and to most of my adaptations of diagrams drawn by the perspectivists.

Concepts Related to the Eye Point and the Picture Plane

The reader will often meet the following situation (figure 1). Given are an *eye point O* (from *oculus*), a horizontal plane of reference γ– called the *ground plane* (in former times the *geometrical plane*) – and a picture plane π. Usually the latter is tacitly assumed to be vertical, but we will also meet situations in which π forms an oblique angle with γ. The line of intersection of π and γ is called the *ground line* and denoted *GR*. The orthogonal projection of *O* upon γ is called its *foot*, and the letter *F* is used to denote this point. Moreover, the orthogonal projection of *O* upon π is called the *principal vanishing point* and denoted *P*, and finally the orthogonal projection of *P* upon *GR*, or equivalently the orthogonal projection of *F* upon *GR*, is denoted by the letter *Q*. There is no common name for this point, but I call it the *ground point*.

The line through *P* parallel to the ground line is called the *horizon,* and denoted by *HZ*. On this line, two points *D* are marked. These are the so-called *distance points*, defined by $PD = OP$. They have been given this name because the distance *OP* between the eye point *O* and the picture plane π is frequently called, simply, the *distance* – which I write in italics throughout the book. Sometimes it is handy to be able to distinguish between the two distance points, and hence I have introduced the terms right and left distance point, the latter of which, when seen from the eye point, is the point lying to the left of *P*.

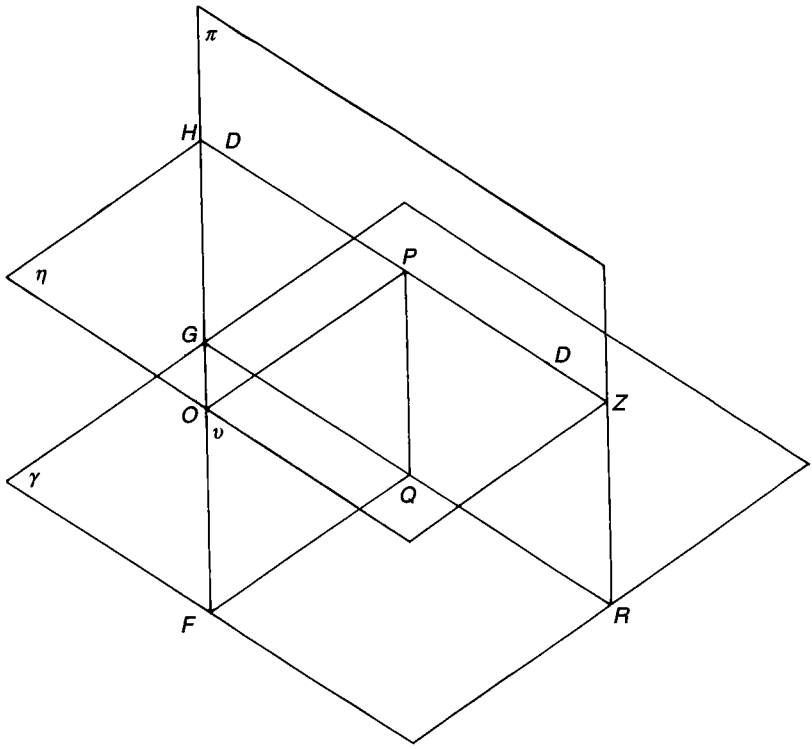

FIGURE 1. Concepts related to the eye point and the picture plane.

Following Nicolas Louis de Lacaille, I call the horizontal plane η which passes through the eye point O, the *horizontal plane*, and name the plane υ defined by the points O, P, and Q the *vertical plane*.

Concepts Related to Images of Points, Lines, and Planes

It is practical to have a term for points and lines (figure 2) situated behind the picture plane π, such as A and l, whose perspective images are constructed. Inspired by Brook Taylor, I introduce the name *original* objects for such elements – occasionally stressing the fact that object is original by adding a subscript o, as in A_o.

My notation for the perspective image of a point A is A_i, and for the perspective image of a line l I use the symbol l_i. When l cuts π, the point of intersection is called its *intersection point* and is denoted I_l. To l is also assigned a *vanishing point*, V_l, defined as the point of intersection of π and the line through O parallel to the line l. As we shall see later, it is a fundamental result in the theory of perspective that the image l_i passes through V_l. For this

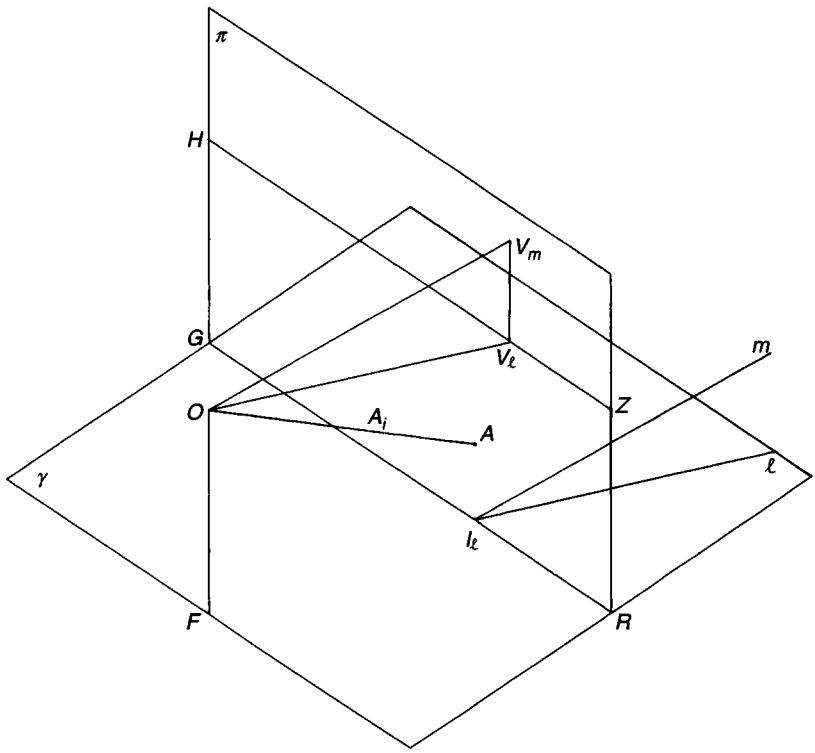

FIGURE 2. Concepts related to the images of a point and a line.

reason many perspectivists, and I with them, also call the point V_l the vanishing point of l_i.

Let α be a plane that cuts π (figure 3). Just as two points were assigned to an original line, two lines are associated to α, its *intersection* i_α, and its *vanishing line* v_α. The first is the intersection of π and α, and the second is the intersection of π and the plane through O parallel to α.

Orthogonals, Transversals, and Verticals

In the interest of brevity, I use the word *orthogonals* to refer to lines orthogonal to the picture plane π, *transversals* for lines parallel to the ground line, and *verticals* for lines perpendicular to the ground plane γ. Many readers will presumably keep the book, and hence the figures, in a horizontal position and therefore not always experience the vertical lines as vertical. However, the term 'vertical' is such a handy concept for describing directions in the three-dimensional space that I use it quite often, asking the readers to rotate the drawings either in their minds or in reality.

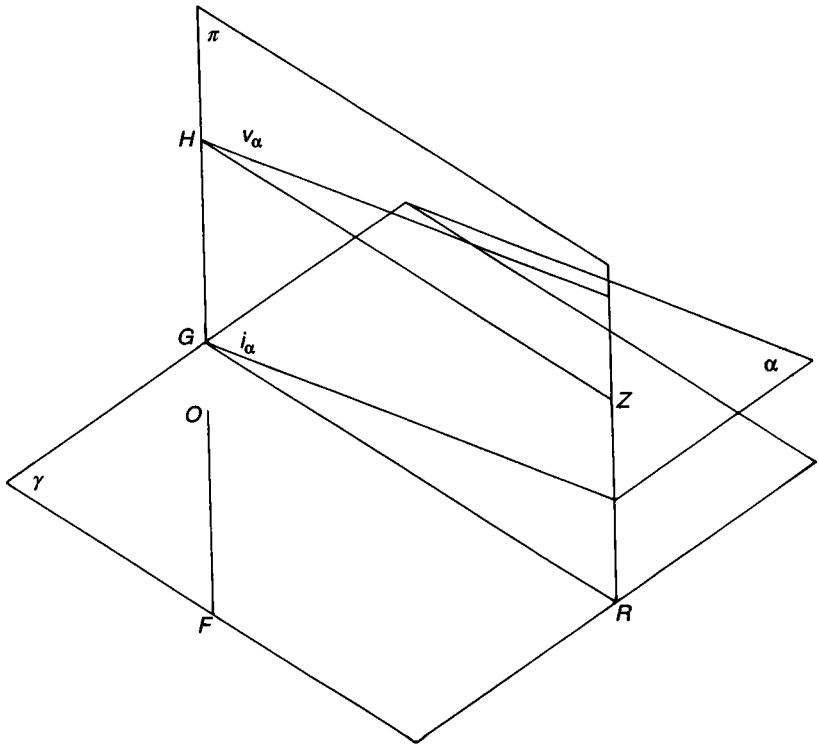

FIGURE 3. Concepts related to the image of a plane.

Rabatment

Since drawing paper is only two-dimensional and a large part of the problems in perspective deal with three-dimensional configurations, different authors have used a variety of procedures for depicting two or more planes on the plane of the paper. For such procedures I use the French term *rabatment*. I myself generally choose parallel projections to illustrate three-dimensional situations.

Mathematical Terminology, Results, and Techniques

Lines and Line Segments

The mathematical perspectivists I am dealing with kept to a tradition dating back to Euclid: they seldom distinguished between a line and a line segment. When they wrote the line AB, for instance, they most often meant the line segment AB – defined by the endpoints A and B. When I am sure of

what they had in mind, I write either 'line segment' or 'line', sometimes using the symbol l for the latter. It often happens that my authors have called a line AB and then only later defined the precise position of the point A or B on the line; in a few cases, I do the same.

As to ratios, I denote the ratio between two line segments AB and CD as $AB : CD$. Modern readers may expect a special sign, as in $|AB| : |CD|$, that shows that the comparison concerns the lengths of the line segments. However, the protagonists followed the classical Greek custom of making 'geometrical calculations' in which they did not assign a number to a line segment, but considered it as a magnitude that could form a ratio with another one-dimensional geometrical magnitude.

Results from the Theory of Proportion

Students trained in classical mathematics learned how to manipulate with ratios and proportions. As this is no longer common knowledge, I have listed below the results referred to in this book. They occur either explicitly as propositions in book five of Euclid's *Elements* or can be obtained by combining Euclid's theorems.

When $r : s = t : u$, then

$$(r + s) : s = (t + u) : u \tag{1}$$

$$r : (r + s) = t : (t + u) \tag{2}$$

$$(r + s) : r = (t + u) : t, \tag{3}$$

and for $r > s$

$$(r - s) : s = (t - u) : u \tag{4}$$

$$(r - s) : r = (t - u) : t, \tag{5}$$

whereas for $s > r$

$$(s - r) : s = (u - t) : u. \tag{6}$$

Again, for $r > s$,

$$s : (r - s) = m : n \text{ implies that } (r + s) : (r - s) = (2m + n) : n. \tag{7}$$

Two proportions can be 'multiplied' as follows:

$$r : s = t : u \text{ and } s : a = u : b \text{ imply that } r : a = t : b. \tag{8}$$

Finally, when r, s, t, and u are of the same kind in the sense that they can all form ratios with each other, then

$$r : s = t : u \text{ implies that } r : t = s : u. \tag{9}$$

Mathematical Techniques

Many of the perspectivists presented in this book complained about how their predecessors treated mathematical techniques. A number of them found that it was presented much too abstractly, and others felt that it was not presented concisely enough. In fact, no solution can satisfy everyone.

This very problem also faces the historian of perspective, who aims to reach readers with different mathematical backgrounds. My approach has been as follows.

The mathematical content of the publications considered is extremely important for my investigation, and historiographically I find it essential to describe the contents in the setting of the mathematics the authors had at their disposal. For instance, I only introduce trigonometrical expressions when the authors themselves did so. Actually, the most frequently applied mathematical discipline in the literature discussed is the theory of similar triangles.

To the extent that I paraphrase proofs, I repeat the authors' arguments in some detail – sometimes in even greater detail than the authors themselves – avoiding to leave the mathematical reasoning as an exercise to the readers. I have done so in the hope that interested readers who are not in the habit of working with geometry may have a chance to follow the arguments. I trust that readers who are familiar with the techniques involved will skip the parts of any proof that bore them.

In addition to giving examples of the various authors' treatment of the geometry behind perspective, I have, in a few cases, added mathematical explanations of topics that the pre-1800 literature did not analyse mathematically. An example of this is the construction of perspective boxes (presented in section VII.4).

The Placement of the Mathematical Explanations

When presenting a construction that has been important in the history of perspective, I include a complete description of it in the main text. Quite often, however, I deal with a perspectival technique that is rather special and requires quite extensive mathematical arguments; such presentations are usually placed in figure captions.

Bibliographies

Two Bibliographies

As indicated in the introduction, this book carries two bibliographies. The first contains all the original works on perspective to which I refer, whereas the second lists supplementary literature: old works on other topics than perspective as well as secondary literature. References to the second bibliography are marked with an ^{S}, as in Kemp^{S} 1990.

References, Orthography, and Ordering of Letters

In some cases, rather than examining the first edition of a source, I have consulted a later one. Yet in order to inform the reader about the first appearance, I keep to this earliest date in the references adding, after a slash,

the year of the edition I have used, an example being Pozzo 1693/1707. In some cases later editions of books are not listed separately, thus Dürer 1538 refers to the second edition from 1538 mentioned under Dürer 1525. For books that were only printed long after they were composed, I have introduced an *ad hoc* abbreviation, using, for instance, the reference 'Piero *Pros*' for Piero della Francesca's *De prospetiva pingendi*. When referring to a page number in the present book I write page, otherwise I just write the number, while I have abbreviated "folio" as fol., and used the symbol § for paragraph.

In preparing the two bibliographies, I have come to hold an ever-greater admiration for bibliographers. It is quite challenging, verging on the impossible, to get the places and years of publication of various editions right. Frequently in early modern times, the same print was distributed by two publishing houses, each choosing their own title page for their copy.

In principle I have kept the original spelling used in book titles, one exception being that I have changed many *us* to *vs* and vice versa. It is however, difficult to copy spelling from a time when no fixed rules existed, so mistakes are unavoidable. As an example I can mention that the title of the book listed as Steiner^{S} 1833 contains the German word for constructions, a word I have seen reproduced as *Konstruktionen*, *Constructionen*, *Construktionen*, and *Konstructionen*. As to the place of publication, I have, in general, included only one town, and I have retained the spelling of the language in which the work was published – although I have translated Latin names of cities.

In alphabetized lists I have ordered the German letters *ö* and *ü* as oe and ue, respectively, and similarly treated the Scandinavian letter *ø* as oe.

Biographies

Having worked with nigh on two hundred authors who combined span more than three hundred and fifty years and a large part of Europe, I have not aspired to write full biographies[1] or provide prosopographies. Where it has been possible to find the information, I have mentioned each author's profession. Taken together, my brief remarks on the various authors show, in particular for the early period, that perspective seduced all sorts of people, from artisans to noblemen, with varying degrees of learning and levels of mathematical understanding. To illustrate the important role ecclesiastics

[1]The literature on the lives and works of the artists, artisans, and mathematicians who wrote on perspective is so enormous that listing it is major project in itself – and one that has actually been undertaken by Kim Veltman, but not yet published (Veltman^{S} forth). In this book I have only included studies that deal with the topic of this book: the development and use of the mathematical theory of perspective. For bibliographies that cover some of the general secondary literature on perspective, I refer the reader to Schüling^{S} 1975; Vagnetti^{S} 1979; Veltman^{S} 1986_2; and Veltman^{S} forth.

played in teaching in early modern times, I have also, when I know it, mentioned an author's affiliation with a religious order. The more remarkable authors have received a few lines of lines biography,[2] and the most influential protagonists rather more.

I find it highly relevant to know what motivated the different authors to take up perspective, but unfortunately I have generally been unable to find answers to this question. In a few cases I myself have suggested a motivation.

Dates for the Protagonists

When I have been able to find the dates relating to the authors, I have included the information in the text and in the index. For quite a number of those mentioned there is no consensus as to the exact years of their birth or death. I have made no notes concerning differences of opinion, but often chosen the solution to indicate circa years, while sometimes deciding to trust one source of information over another. For other than the protagonists, whenever possible I have listed their dates in the index, but only for those who lived and died before the twentieth century.

My Text

Quotations and Paraphrases

Quotations of some length are printed in a smaller type than the rest of the text. All non-English quotations have been translated into English. Sometimes I have used an existing translation, to which I have then naturally referred. The rest are my own translations, which I have tended to leave fairly literal. In a few cases where the original text is not understandable without an extensive explanation, I have made a free translation – and said so in the text. These translations are indented and printed in normal font size. There are similarly some cases in which I have paraphrased a result, and these I have treated typographically like free translations.

During the Renaissance it was common to add points both before and after a letter when it referred to a point in a diagram, as in *.R.*, for instance. For the sake of simplicity, in the quotations I have written only *R* and left out the points.

---

[2]For these I have used – without making specific references – the following works: van der Aa[S] 1852; Nouvelle[S] 1852; Allgemeine[S] 1875; Dictionary[S] 1885; Thieme & Becker[S] 1907; Dictionnaire[S] 1933; Dizionario[S] 1960; Wallis & Wallis[S] 1986; Placzek[S] 1982; Deutscher[S] 1986; British[S] 1990; Indice[S] 1993; Index[S] 1993; Biografische[S] 1997.

Use of My Earlier Publications

Part of the material in this book has been the subject in some of my earlier publications.[3] Everything has been reworked so as to fit into the context of this book. Nevertheless, I have occasionally recycled some sentences from my previous work.

[3]Some sections of chapter I were presented at the conference *"Higher Artisans": Humanism and the University Tradition, Copenhagen 29–31 October 1998* organized by Jens Høyrup and Marianne Pade; chapter II and section VII.6 overlap partially with Andersen^{S} 1987_1, Andersen^{S} 1992_3, and Andersen^{S} 1996; chapter III is a revised version of a paper presented at the meeting *Linear Perspective, The First Century, Dibner Institute Workshop, 18–20 May 1995*, organized by Jehane Kuhn; the second part of chapter VI and some sections of chapter VII share their themes with Andersen^{S} 1990; chapter IX contains material published in Andersen^{S} 1991 and Andersen^{S} 1996; chapter X has some overlap with Andersen^{S} 1992_1; and appendix one is an abbreviated and revised edition of Andersen^{S} 1987_2.

Chapter I

The Birth of Perspective

I.1 The First Written Account of Geometrical Perspective

Leon Battista Alberti was the first to present a perspective construction in writing. He did so in 1435 in his *De pictura*, in which he also introduced a model for perspective representation. Alberti's own way of expressing his definition is described in chapter II, but here I find it convenient to translate his definition into modern terms (figure I.1): Given a picture plane π and an eye point O, an object behind π is depicted upon it by mapping each point A in the object upon the point A_i in which the line OA cuts the surface π. This is the same as saying that the object is mapped upon π by a perspective or central projection with its centre in O.

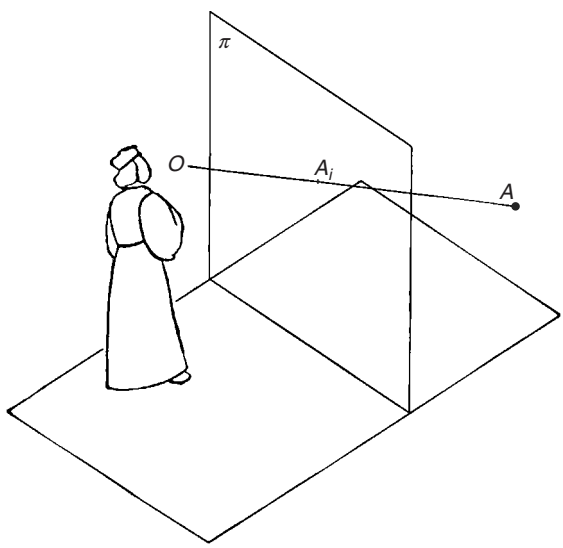

FIGURE I.1. A perspective projection; the viewer is borrowed from Viator.

Because Alberti's description is the oldest – and because I study the development of the mathematical theory of perspective as it can be learned from tracts on perspective – I might well be tempted to begin my account with Alberti. It does not seem right, however, to ignore the early history completely, so I have dedicated the remainder of this chapter to discussing, rather briefly, some events preceding Alberti's epoch-making presentation of geometrical perspective.

I.2 The Origin of Perspective

The challenge of representing three-dimensional objects upon two-dimensional surfaces is an ancient one. Down through the ages, artists and artisans in various civilizations have found different solutions to this problem. There has been a general tendency to adhere to one system for a period within a particular culture.

Sufficient material, above all paintings, has survived to allow us to conclude that perspective was born in *quattrocento* Italy. Doubtless the creation was a result of earlier generations' struggle to organize objects in space, but we have no documents that reveal the individual steps in this development. The lack of knowledge has inspired many scholars to speculate about what happened. In fact, although perspective is just one technique for representing spatial objects, its emergence has been seen as a major event in the history of mankind and has fascinated a considerable number of art historians and other intellectuals as well.[1] Many reasons for the birth of perspective have been put forward. They vary from the extremely simplistic that the central role attached to man in the Renaissance fostered the idea of making a representation that uses a central point to some refined suggestions, which involve aspects of the history of art, science, technology, sociology, philosophy, psychology, and religion. Some suggestions concentrate on the intellectual conception of perspective representation, whereas others focus on the invention of a procedure for performing perspective constructions. However, none of the many discussions offers a convincingly elementary explanation of how and why perspective was conceived – and in my opinion, such an explanation cannot be found. Rather than paraphrasing the various hypotheses or attempting to make a synthesis of them, I deal with some aspects I find important to elucidate the birth of perspective.

[1]Works dealing with the problem of the origin of perspective include Panofsky[S] 1927/1991; Edgerton[S] 1976; Gablik[S] 1976, 44–45, 66–73; Kemp[S] 1978, 134–136, 146–158; Abels[S] 1985, 77–94; L. Goldstein[S] 1988; Kubovy[S] 1988, 162–173; Damisch[S] 1994; Raynaud[S] 1998.

I.3 Four Stimuli

Among the many stimuli from various fields that led to geometrical perspective I have chosen four that I consider particularly influential, and of which traces can be found in Alberti's treatment of perspective. The four stimuli concern intellectual as well as technical issues and are, to some extent, interrelated. They are:

i. The idea of reproducing an instantaneous view
ii. Experiments with depicting particular lines in a composition
iii. A search for mathematical rules
iv. Inspiration from the theory of optics

Painting a View

Finding an expression that precisely covers the concept I have in mind is not easy. It is linked to the idea that there should be resemblance between a motif and its pictorial representation. In the language of a later technique one might refer to it as 'taking a picture' (Kubovy[S] 1988, 17). Ernst Gombrich has called it 'the eye-witness principle' (Gombrich & Eribon[S] 1993, 107). I have chosen the phrase 'reproduction of an instantaneous view' by which I mean that everything in the composition takes place at the same time and is seen from one point of view. In using this expression I *do not* mean an imitation of the visual perception, but rather an imitation that gives the same visual impression as an original situation (see also pages 20, 111, and 727).

While avoiding the discussion of what role the reproduction of an instantaneous view played in Greek and Roman art and how it emerged in Italy, I maintain that it was essential in the development of geometrical perspective. There are – at least – two sides to the desire to reproduce an instantaneous view: the one concerns an attempt to depict humans so they resemble living people, and the other concerns the representation of objects delimited by lines and planes, such as architectural elements. I will only deal with the latter here.

One reason for wanting to draw a picture so that it reproduces an instantaneous view might be that when we draw, it can be difficult to find room for all the objects we wish to include; if indeed these objects exist within a view, it tells us that they can be depicted on a two-dimensional surface, for instance upon the glass of a window pane. Thus, a reproduction of an instantaneous view provides a method for organizing the images of spatial objects. The performance of this reproduction calls for the development of a system, including certain rules. Once such rules have been established, they can be applied for making drawings of imaginary sceneries as well.

The earliest existing description of perspective representation, the account given by Alberti in his *De pictura*, clearly contains the idea of reproducing an

instantaneous view. He formulated it as the requirement that a painting should give the viewer the same impression as he would have looking at the scene from one fixed point through an open window, and also compared it with a mirror image (Alberti 1435/1972, §§12, 19, and 26).

Representation of Special Lines

In the following I call lines that are orthogonal to the picture plane *orthogonals*, and lines that are horizontal and parallel to the picture plane *transversals*.

The idea of reproducing an instantaneous view was already present in Italy – consciously or unconsciously – in *trecento*, if not earlier. It took the form of various experiments with the representation of space (Panofsky[S] 1927/1991, 56–59). In an interview, Gombrich described this in Popperian terms as a process of trial and error (Gombrich & Eribon[S] 1993, 106). One of the experiments concerned the drawing of orthogonals. Examples of this are seen in two of Duccio's paintings from the beginning of the fourteenth century. In his *Last Supper* (figure I.2) he depicted the orthogonals in the ceiling in a special way that Erwin Panofsky called "fishbone perspective" (Panofsky[S] 1927/1991, 38). According to this concept (figure I.3), the images of a pair of lines in the ceiling, positioned symmetrically with respect to the

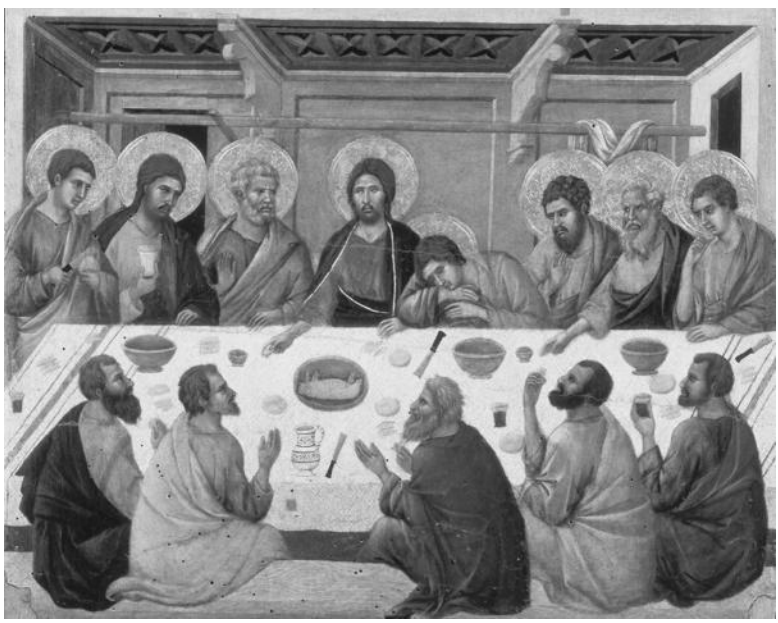

FIGURE I.2. Duccio di Buoninsegna, *The Last Supper*, c. 1310, Museo dell'Opera Metropolitana, Siena.

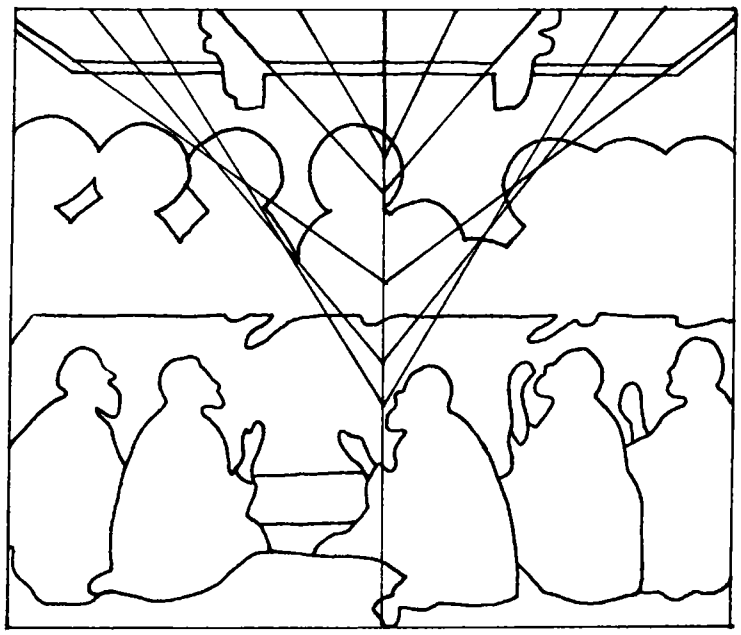

FIGURE I.3. Diagram showing some of the orthogonals in the previous figure.

image of the orthogonal at the middle of the picture, are drawn as lines that intersect each other on the line of symmetry. Notice that each pair has its own point of convergence. It was only for lines in the ceiling that Duccio applied convergence points, for instance the orthogonals in the plane of the table are drawn as parallel lines. Duccio's *Announcement of the Virgin's Death* (figure I.4) also shows a distinction between orthogonals in the ceiling and other orthogonals. In this painting, lines through the beams even converge towards one point (figure I.5).

The idea of drawing all orthogonals in one plane – but not all orthogonals in the picture – so that they have one point in common was also applied by Ambrogio Lorenzetti in his *Annunciation* (figure I.6). In this case, the orthogonals of the floor converge towards one point (figure I.7).

Later some painters took to drawing all orthogonals with one common point of intersection – the point that much later came to be known as *the principal vanishing point*. An example of this practice from the mid-fourteenth century is shown in figures I.8 and I.9. Apparently, in some circles it gradually became a rule, which I call the *convergence rule*, to represent all orthogonals so that they converge in one point. It is unclear when this happened, but it must have been some time before Alberti wrote on perspective in 1435, because in his work the convergence rule occurs as tacit knowledge – and as an important part of his

FIGURE I.4. Duccio di Buoninsegna, *Announcement of the Virgin's Death*, c. 1310, Museo dell'Opera Metropolitana, Siena.

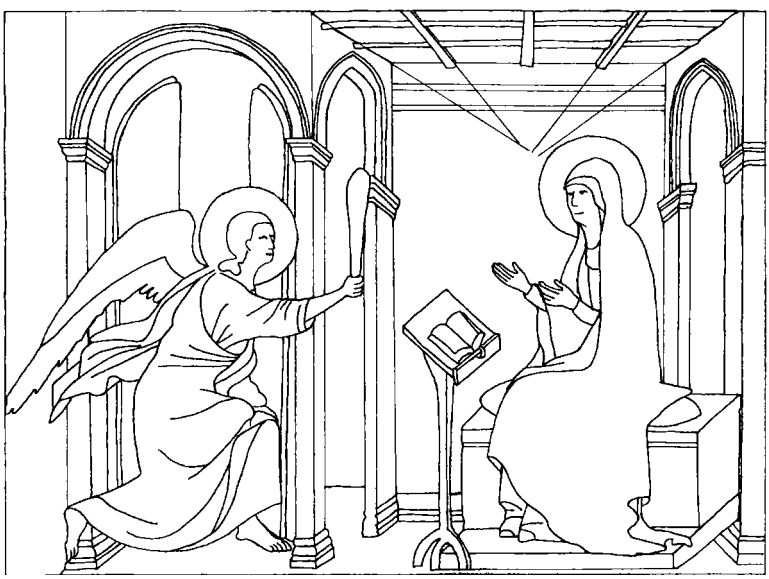

FIGURE I.5. Diagram showing some of the orthogonals in the previous figure.

FIGURE I.6. Ambrogio Lorenzetti, *The Annunciation*, 1344, La Pinacoteca Nazionale, Siena.

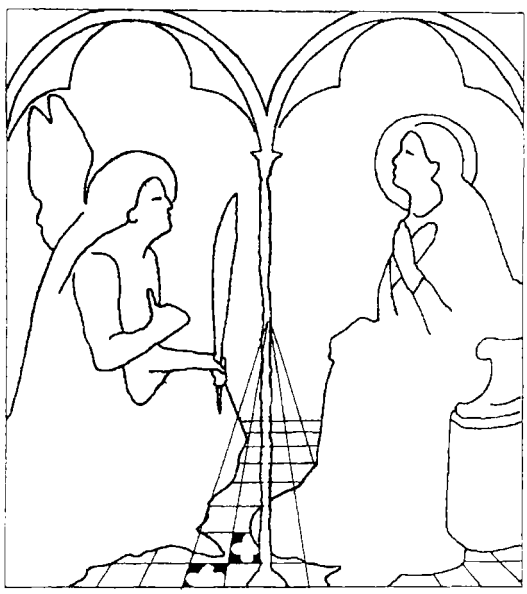

FIGURE I.7. Diagram showing some of the orthogonals in the previous figure. Larsen[S] 2003, Tillæg, 23.

FIGURE I.8. Detail of a miniature of *Petrarch in his study*, mid-fourteenth century, Biblioteca Trivulziana, Milan, Codex 905.

construction (section II.4). The rule can actually be deduced mathematically from Alberti's model, but nobody is known to have done so before Guidobaldo del Monte published a proof of the rule in 1600.

Pictures in which orthogonals occur normally also contain transversals. In almost all cases the transversals were drawn as lines parallel to the ground line – that is the lowest horizontal line in the picture.[2] The fact that there was a standard for representing the orthogonals may have given inspiration also to create a system for the representation of the equidistant transversals in a floor of squared tiles. From Alberti we know that a rule did exist – one with

[2]Exceptions are found in figures III.24-III.26.

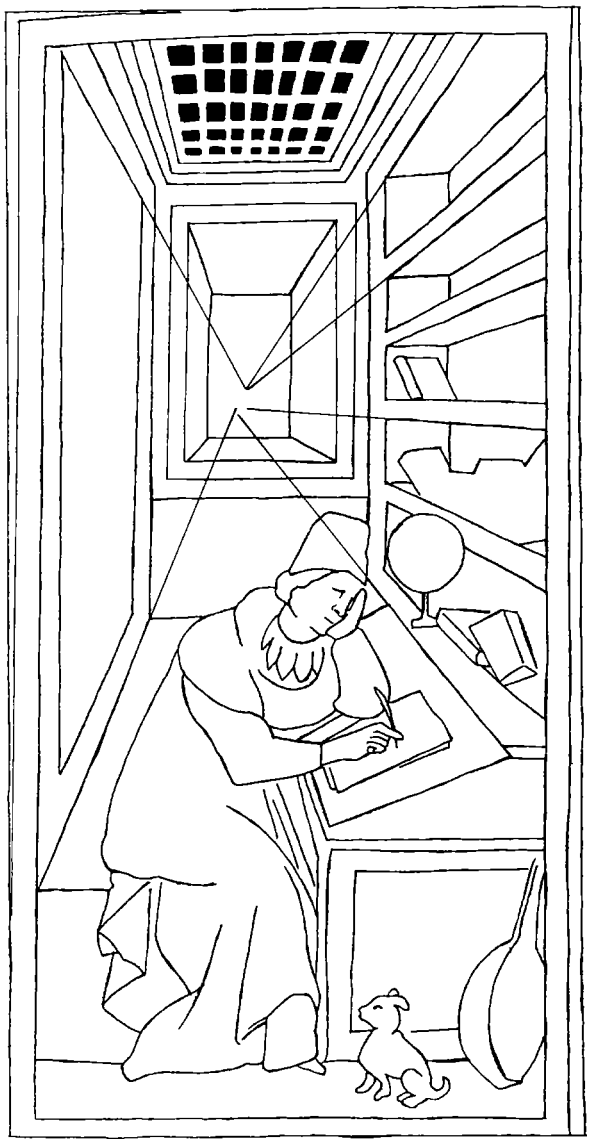

FIGURE I.9. Diagram showing some of the orthogonals in the previous figure.

which he disagreed, as we shall see in figure II.12. This rule stated that the intervals between the images of three equidistant transversals should be in the ratio 3:2 with the largest interval nearest to the ground line (Alberti 1435/1972, §19; figure II.12). Similarly, most compositions with geometrical elements contain vertical lines – which I call *verticals*. These were, as far as I have noticed, always depicted as verticals.

A Search for Mathematical Rules

The creation of the above-mentioned laws shows that in striving to imitate a visual impression, painters did not exclusively rely upon what they observed. They used observations, for instance, when deciding on various shades of colour or depicting how fabric drapes and folds, but when organizing space they searched for mathematical rules. This development is in agreement with the Renaissance revival of Pythagorean thoughts about the world of mathematics, leading among other things to the idea that mathematics could serve the arts of painting, architecture, and music.

Some of those attracted by mathematics wished to find structure and harmony in nature and were fascinated by aspects of mathematics that seemed almost mystical or divine. We find such an attraction in modern times, too; and it has actually been expressed in connection with perspective by the Danish author Karen Blixen – also known as Isak Dinesen:

> A new and beautiful world revealed itself to me while I was learning perspective drawing, I was enchanted by the unshakable justice and regularity in the rules of perspective. If I myself acted correctly the outcome could not fail to be correct – but if I permitted the least negligence it invariably and with frightening power took revenge at the conclusion of the assignment.[3] [Based upon Thurman^{S} 1982, 67]

Inspiration from Optics

Optics was one of the sciences developed in antiquity that received considerable attention in the late Middle Ages. This discipline provided the early perspectivists with both intellectual and technical stimuli. Intellectually optics contributed to the idea that vision should be treated scientifically, and technically it influenced the formulation of rules.

From optics, the theory of perspective took over the fundamental assumption that seeing takes place along straight lines. Much of the other inspiration came from that part of optics which deals with appearance and treats the problem of how the visual impression of an object is dependent on the angle within which the object is seen. A basic hypothesis in this theory is that line segments seen within the same angle appear to be equal,[4] and a fundamental result is that parallel lines appear to converge. The theory was restricted to visual *appearances*, and not all of its results are immediately applicable to the question of how to make *representations* of objects upon a plane. In some cases an application of the theory of appearances to perspective images can even lead to conclusions that conflict with the theory of

---

[3] *En ny og skøn Side af Verden aabenbarede sig for mig, da jeg lærte Perspektivtegning, Jeg blev paa en ejendommelig Maade henrevet af den urokkelige Retfærdighed og Lovbundethed i Perspektivtegningen. Hvis jeg selv bar mig rigtig ad, kunde det ikke undgaas, at Resultatet blev rigtigt, – men tillod jeg mig den mindste Skødesløshed hævnede den sig, ved Afslutningen af en Opgave, ufravigelig, og med frygtelig Kraft!* [Blixen^{S} 1950]

[4] This is part of the so-called angle axiom (cf. page 38).

perspective (pages 725–726). Nevertheless, some of the results of the theory of visual appearance may have been used – correctly or incorrectly – to deduce useful rules for painting.[5]

The idea that perspective and optics are connected is, as we shall see, present in Alberti's work, and also in a large part of the subsequent literature on perspective.

I.4 Brunelleschi

It is generally agreed that the famous Florentine goldsmith and architect Filippo Brunelleschi (1377–1446) was the first to paint genuine perspective compositions, and that this happened in the second decade of *quattrocento*. According to the first biography of Brunelleschi, most likely composed by Antonio Manetti around 1480, Brunelleschi presented his invention on two panels depicting, respectively, the church *Santo Giovanni*, later known as the Baptistery, and the *Palazzo dei Signori* in Florence. Unfortunately, these panels are now lost. Manetti also related that Brunelleschi's presentation of the first panel called for a rather complicated arrangement involving an observer and a mirror (Manetti[S] *Vita*, 42–47). Thus, the observer was to look at the mirror image of the panel (figure I.10). Although Manetti did not mention this, my interpretation is that the observer was then supposed to look at the mirror image of the Baptistery and experience the marvel that there was no difference between the reflections.[6]

The arrangement with the mirror clearly shows that the idea of reproducing an instantaneous view must have been part of Brunelleschi's creation. Apart from this we know nothing – neither about how he got inspired to use this kind of representation nor about which technique he applied for constructing his panels. Brunelleschi's method of construction in particular has often been discussed, and various techniques have been suggested.

Four Possible Techniques

In the second half of the fifteenth century, Antonio Averlino, known as Filarete, proposed that Brunelleschi had also applied a mirror when he

[5]For a more detailed discussion, see Andersen[S] 1987_2, 75–82, and appendix one, pages 723–726.

[6]My reason for suggesting that the mirror image of the Baptistery, rather than the Baptistery itself, should be considered is that by this procedure both the panel and the Baptistery are mirrored and hence the likeness would be more striking. For interpretations with more technical details, in particular concerning the dimensions of the panels and their eye points, see Parronchi[S] 1964, 226–295; Edgerton[S] 1976, 125–129; Kubovy[S] 1988, 32–39; Kemp[S] 1990, 11–15, 344–345; for further references, see Elkins[S] 1994, 7, note 9.

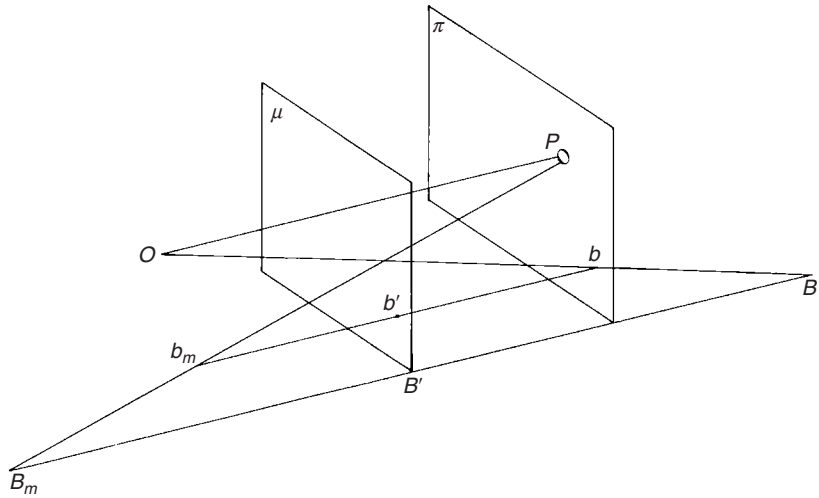

FIGURE I.10. Brunelleschi's demonstration. Let π be the picture plane holding Brunelleschi's painting of the Baptistery – on my diagram only the image b of a point B on the façade of the Baptistery is shown – and let O be the eye point of the painting, P its orthogonal projection upon π, and μ a mirror placed parallel to π halfway between O and P. My interpretation is that Brunelleschi's idea was that the viewer should initially stand with his back to the Baptistery viewing the painting of it by looking into the mirror from the back of the panel through a hole at P, then remove the panel and in his mind compare the mirror image of the panel with the mirror image of the Baptistery – and find no difference.

In order to prove this procedure will work, I show that when b is the perspective image of the point B on the Baptistery, the eye at P will experience the mirror image of b as the same point as the mirror image of B. With this aim I let b' be the orthogonal projection of b upon μ, and b_m the point on bb' determined by $b'b_m = b'b$; I call this point the mirror point of b. According to the law of reflection (cf. page 529), the reflected light from b appears to the eye at P to come from b_m, and hence from any other point at the line Pb_m – the assumption in perspective being that all points on a line through the eye are seen as the same point. A straightforward geometrical consideration shows that the mirror point B_m of B is situated on the line Pb_m. This means that the eye at P will see the mirror image of b as the same as the mirror image of B.

constructed his panels (Filarete *Arch*, 657). Apparently Filarete was of the opinion that not only was copying a mirror image a source of inspiration for Brunelleschi's creation of a perspective composition, but it was also a means in the construction – and a device in the presentation. On the other hand, about a hundred years later the painter and writer Giorgio Vasari claimed that Brunelleschi applied a plan and elevation technique (Vasari[S] 1550/1987, vol. 1, 136).

In modern times, Martin Kemp has listed six possible ways in which Brunelleschi may have constructed his panels (Kemp^{S} 1990, 344–345). His favourite solution, which later was supported by Jehane Kuhn, is that Brunelleschi's perspective compositions originated from his engagement in measuring buildings from a distance. Brunelleschi could have kept a fixed eye point for his enterprise and used measuring rods situated in one plane – corresponding to a picture plane. Besides calculating the dimensions of the buildings from the measures taken, he may also have got the idea to draw a picture based on his measurements (Kemp^{S} 1978, 144–146; Kemp^{S} 1990, 345; Kuhn^{S} 1990, 118–122). If I understand Kemp and Kuhn correctly, their suggestion is that Brunelleschi applied measuring rods to locate the image points in the picture plane. This technique is similar to the basic technique behind several perspective instruments.

In working out his ideas on painters' use of optical instruments, the painter David Hockney became interested in Brunelleschi's panels. He reconstructed the situation described by Manetti, reaching the conclusion that it is possible Brunelleschi used a lens for painting his panel of the Baptistery (Hockney^{S} 2001_1, 286 and Hockney^{S} 2001_2).

Brunelleschi's Conception of Perspective

The four discussed techniques of constructing a perspective image require different degrees of awareness of what a perspective representation is: a direct construction on a mirror or the use of a lens requires less awareness, and a plan and elevation method the most. Indeed, the latter seems impossible to perform unless it is based on a conception of a perspective image that is equivalent to Alberti's model. None of the techniques demands the convergence rule (a view also expressed in Kemp^{S} 1990, 345).[7] This is in accordance with Kuhn's suggestion that Brunelleschi worked independently of the painters' tradition (Kuhn^{S} 1990, 117).

No Conclusion

The idea that Brunelleschi applied a technique belonging to his profession appeals to me, and I think that he was familiar with using a plan and an elevation of an object. Nevertheless, I do not claim, as among other authors Hans Schuritz, that Brunelleschi applied a plan and elevation method to construct his panels (Schuritz^{S} 1919, 7), because I do not find that this is in agreement with what happened after the demonstration of the panels. It is unlikely,

[7]In order for Brunelleschi's demonstration arrangement to work (caption of figure I.10) he must have involved the projection of the eye point upon the panel, but that does not necessarily mean he also conceived of it as a convergence point for the images of orthogonals.

as noted, that Brunelleschi could have applied a plan and elevation technique without having a precise geometric definition of a perspective representation. If he really had both a definition and a technique, the natural scenario would be that he would have described his findings to some of his artist friends – including Donatello and Masaccio – whom he persuaded to apply his new method of representation, and that Alberti would have heard about it. However, there is no sign that this took place (for another discussion on Brunelleschi's method see Field, Lunardi & Settle[S] 1989, 69–71, 77–78).

In *De pictura* Alberti did not mention Brunelleschi, but in 1436 he dedicated his Italian version of the work, *Della pittura*, to Brunelleschi. This indicates that Alberti wished to acknowledge gaining inspiration from Brunelleschi. Had he learned something of the theory and practice of perspective from Brunelleschi, Alberti would presumably have referred to this, and not merely written, as he did, that in Brunelleschi he recognized "a genius for every laudable enterprise" (Alberti 1972, 33). In this connection it is worth mentioning that Alberti's method of constructing, presented in section II.4, is only partially based on a plan and elevation technique. Actually, the earliest known description of a plan and elevation method for perspective is written by Piero della Francesca and was presumably composed during the last third of *quattrocento* – more than half a century after Brunelleschi made his panels.

Having dismissed the idea that Brunelleschi developed a precise geometrical construction of a perspective image, I am left with the problem of what he actually did, if not that? The answer is that I do not know, but I find it likely that he applied a technique that was based on some experience. He could have found this by looking in a mirror,[8] but I do not think he drew his panel on a mirror. Had that been the case, it is most probable, as Kemp states, that Manetti would have mentioned this (Kemp[S] 1990, 345). Nor do I think he applied a lens. It should be noted that although Brunelleschi's panels were much admired, we cannot be sure they were drawn as exact central projections of the depicted objects.

Brunelleschi's Success

Whatever Brunelleschi's motivation and technique, he initiated a development that would soon have a profound impact on the art world. Within a rather short span of time perspective representation was taken up by a group of Florentine artists. The trend soon migrated to other parts of Italy, and over the following century it travelled North of the Alps. As a result, by the end of the sixteenth century perspectival representation had become a paradigm – and so it would remain for the next three centuries.

[8]If one looks in a mirror from the side (to avoid one's own reflection) it is possible to observe, for instance, the convergence of the mirror images of parallel lines that are not parallel to the mirror.

I.5 Perspective Before the Renaissance?

Before leaving the theme of perspective prior to Alberti's work from 1435, I must mention that not all historians agree that perspective is a Renaissance invention. Some believe that a theory of perspective already existed in antiquity. Two of the advocates of this hypothesis are Samuel Y. Edgerton and John White, who refer to a Renaissance rediscovery of perspective and a rebirth of pictorial space, respectively (White[S] 1957/1987, Edgerton[S] 1976).

In my opinion there may have been some rules for painting in antiquity, and these rules may have been similar to some of the later laws of perspective, and they may have been partly inspired by optics. However, since we have no traces at all of, or allusions to, an antique, comprehensive theory of drawing based on mathematical principles – like the one presented by Alberti – I am convinced that such a theory was an original Renaissance creation (see also appendix one).